par lite LED

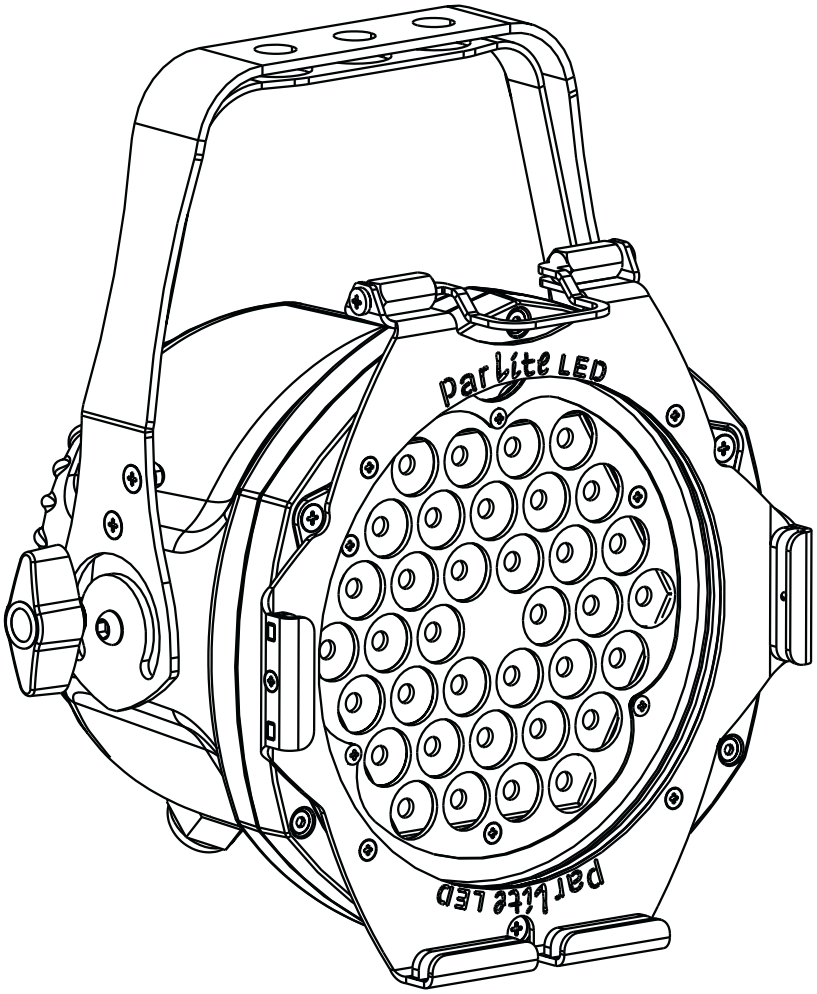

manuale di istruzioni
instructions manual

Version 1.1

coemar
LIGHT EMOTION

par Lite LED

numero di serie/serial number

data di acquisto/date of purchase

fornitore/retailer

indirizzo/address

cap/città/suburb

provincia/capital city

stato/state

tel./fax/

Prendete nota, nello spazio apposito, dei dati relativi al modello e al rivenditore del vostro **Par Lite LED**: questi dati ci permetteranno di assistervi con la massima rapidità e precisione.

Please note in the space provided above the relative service information of the model and the retailer from whom you purchased your **Par Lite LED***: this information will assist us in providing spare parts, repairs or in answering any technical enquiries with the utmost speed and accuracy.*

ATTENZIONE*: la sicurezza dell'apparecchio è garantita solo con l'uso appropriato delle presenti istruzioni, pertanto è necessario conservarle.*

WARNING*: the security of the fixture is granted only if these instructions are strictly followed; therefore it is absolutely necessary to keep this manual.*

Users Manual Version 1.1
edition November 2005

Index

1. Packaging and transportation Pag. 4
- 1.1. Packaging " 4
- 1.2. Transportation " 4

2. General information Pag. 4
- 2.1. Important safety information " 4
- 2.2. Warranty conditions " 4
- 2.3. CE Certification " 4

3. Product specifications Pag. 5
- 3.1. Technical characteristics " 5
- 3.2. Dimensions " 5
- 3.3. Projector components " 5

4. Installation Pag. 6
- 4.1. Mechanical installation " 6
- 4.2. Attaching a safety chain " 7
- 4.3. Adjusting beam direction " 7
- 4.4. Opening and closing up the projector " 8
- 4.5. Adjusting the beam angle " 8

5. Powering up Pag. 10
- 5.1. Operating voltage and frequency " 10
- 5.2. Mains connection " 10

6. DMX signal functions Pag. 11
- 6.1. Connecting DMX signal " 11
- 6.2. Turning on the projector " 11
- 6.3. DMX addressing " 12
- 6.4. DMX functions " 12

7. Test function Pag. 13

8. Light ON function Pag. 13

9. Auto function Pag. 14
- 9.1. Master/Slave mode " 14
- 9.2. Stand Alone mode " 15

10. IR function Pag. 16
- 10.1. Master/Slave mode IR " 16
- 10.2. Stand Alone mode IR " 17

11. DR1 function Pag. 17
- 11.1. Functions using DR1 (MODE) " 18
- 11.2. Setting up functionality using DR1 (FUNC) " 19
- 11.3. Diagnostic functions using DR1 (MEAS) " 20
- 11.4. Error messages using DR1 " 20

12. Switch panel signals Pag. 21

13. Thermal protection Pag. 21

14. Maintenance Pag. 21
- 14.1. Replacing blown fuses " 21
- 14.2. Periodic maintenance " 21

15. Spare parts Pag. 21

16. Frequently asked questions Pag. 22

English

Congratulations on having purchased a **Coemar** product. You have assured yourself of a fixture of the highest quality, both in componentry and in the technology used. We renew our invitation to you to complete the service information on the previous page, to expedite any request for service information or spares (in case of problems encountered either during, or subsequent to, installation). This information will assist in providing prompt and accurate advice from your **Coemar** service centre..

1. Packaging and transportation

Following the instructions and procedures outlined in this manual will ensure the maximum efficiency of this product for years to come.

1.1. Packaging

Open the packaging and ensure that no part of the equipment has suffered damage in transit. In case of damage to the equipment, contact your carrier immediately by telephone or fax, following this with formal notification in writing.

Packing list

Ensure the packaging contains:
1 Par Lite LED
1 Instruction manual

1.2. Transportation

The **Par Lite LED** should be transported in either its original packaging or in an appropriate flight case.

2. General information

2.1. Important safety information

Fire prevention:

1. Never locate the fixture on a flammable surface.
2. Minimum distance from flammable materials: 0.5 m.
3. Minimum distance from the closest illuminable surface: 0,5 m.
4. Replace any blown or damaged fuses only with those of identical values. Refer to the schematic diagram if there is any doubt.
5. Connect the projector to mains power via a thermal magnetic circuit breaker.

Prevention against electric shock:

1. High voltage is present in the internal of the unit. Isolate the projector from mains supply prior to performing any function which involves touching the internal of the unit.
2. For mains connection, adhere strictly to the guidelines outlined in this manual.
3. The level of technology inherent in the **Par Lite LED** requires the use of specialised personnel for all service applications; refer all work to your authorised **Coemar** service centre.
4. A good earth connection is essential for proper functioning of the projector. Never operate the unit without proper earth connection.
5. The mains cable should not come into contact with other cabling.
6. Never handle the unit with wet hands or in a damp environment.

Safety:

1. The projector should always be installed with bolts, clamps, and other fixings which are suitably rated to support the weight of the unit.
2. Always use a secondary safety chain of a suitable rating to sustain the weight of the unit in case of the failure of the primary fixing point..
3. Never install the fixture in an enclosed area lacking sufficient air flow; the ambient temperature should not exceed 35°C.
4. The external surface of the unit, at various points, may exceed 80°C. Never handle the unit until at least 10 minutes have elapsed since the unit was turned off..

Protection rating of the body against liquids and solids:

1. The fixture is classified ordinary apparatus ; its protection grade against penetration by external agents,solid or liquid, is **IP 20**

2.2. Warranty conditions

1. The fixture is guaranteed for a period of 12 months against manufacturing faults and faulty materials.
2. Faults due to incorrect operation or operation in an inappropriate manner are not covered by the warranty.
3. The warranty is immediately void if the fixture has been operated or serviced by unqualified or unauthorised personnel.
4. The warranty does not include fixture replacement.
5. The model and serial numbers must be supplied for any warranty claims or advice from our authorised service personnel.

2.3. CE Certification

The fixture meets all requirements for CE certification.

3. Product specifications

3.1. Technical characteristics

Power:	90/240 Vac 50/60Hz Autosensing
Nominal current:	0.2A @ 230Vac 0.5A @ 115V
Power factor:	cos φ = 0.8
Led power:	36 Led x 1W
Minimum ambient temperature:	-15°C / 5°F
Maximum ambient temperature:	35°C / 95°F
Weight:	3.6 Kg / 7.9 lbs

3.2. Dimensions

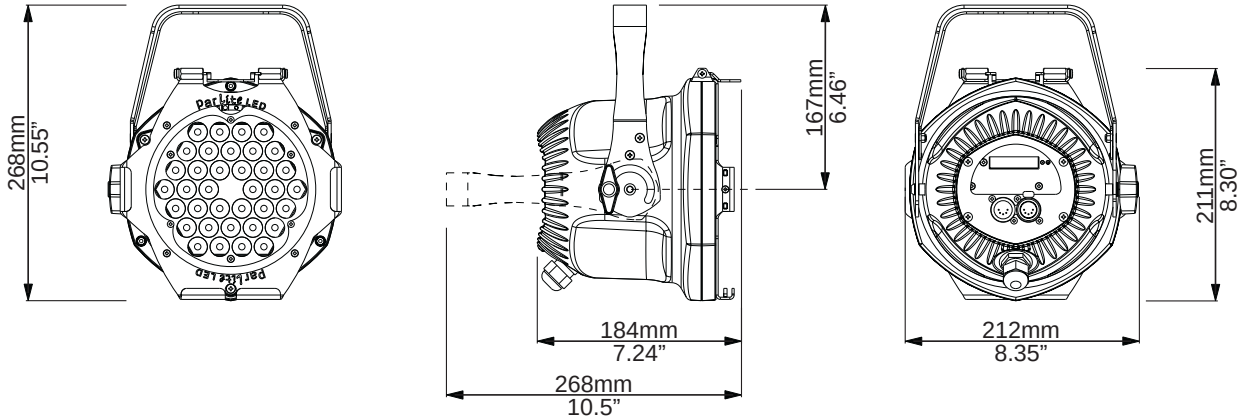

3.3. Projector components

The principal components of the **Par Lite LED** are shown in the diagram below.

Descrizione dei componenti

1. Rear panel
2. Projector body
3. Dip-switch panel
4. Led control PCB
5. Switching power supply
6. Head
7. Lens group
8. Front frame

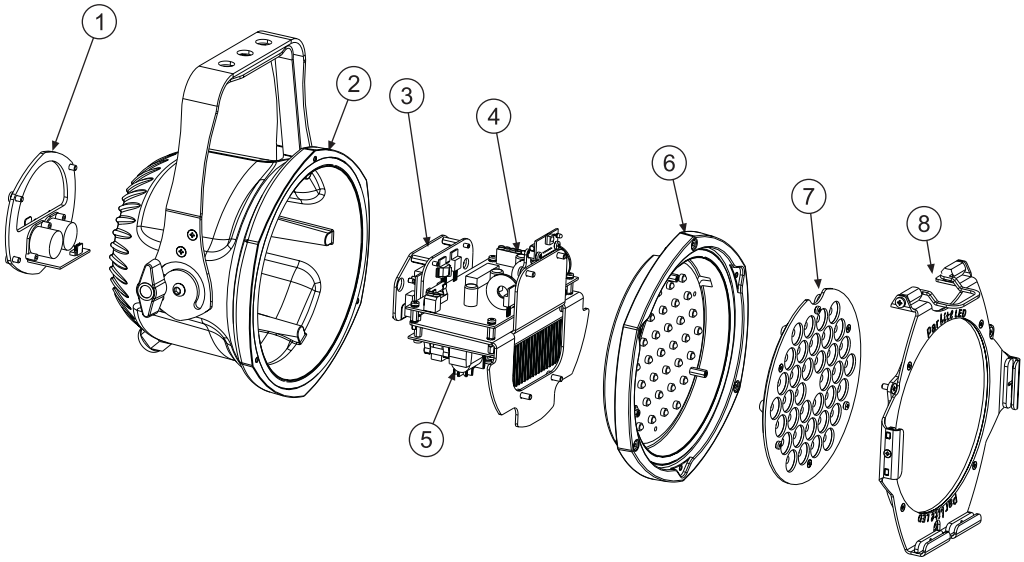

4. Installation

4.1. Mechanical installation

Par Lite LED may be floor mounted or hung from an appropriate structure in any position.

Permanent installation
Use the three holes "**A**" on the yoke of the **Par Lite LED** for robust, permanent installation.

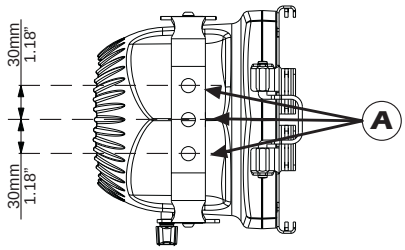

Mobile installations
If hanging the fixture from a lighting truss or similar, we recommend the use of appropriate clamps "**B**", affixed to the yoke in the holes "**A**" provided, as shown in the following diagram.

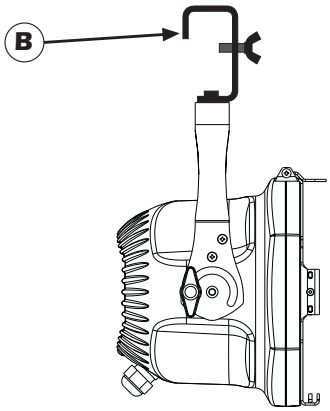

ATTENTION!!

Always ensure that your support structure and fixings (bolts, clamps, etc.) are rated to support the weight of the fixture.

Never install the fixture in a position in an accessible position to personnel who may ignore or be unaware of the safety directions mentioned in this manual.

4.2. Safety chain

When hanging the **Par Lite LED** we recommend the use of a safety chain "**C**" affixed to the yoke and to the suspension device. The safety chain should be either a metal wire rope or a metal chain, both suitably rated for the purpose.

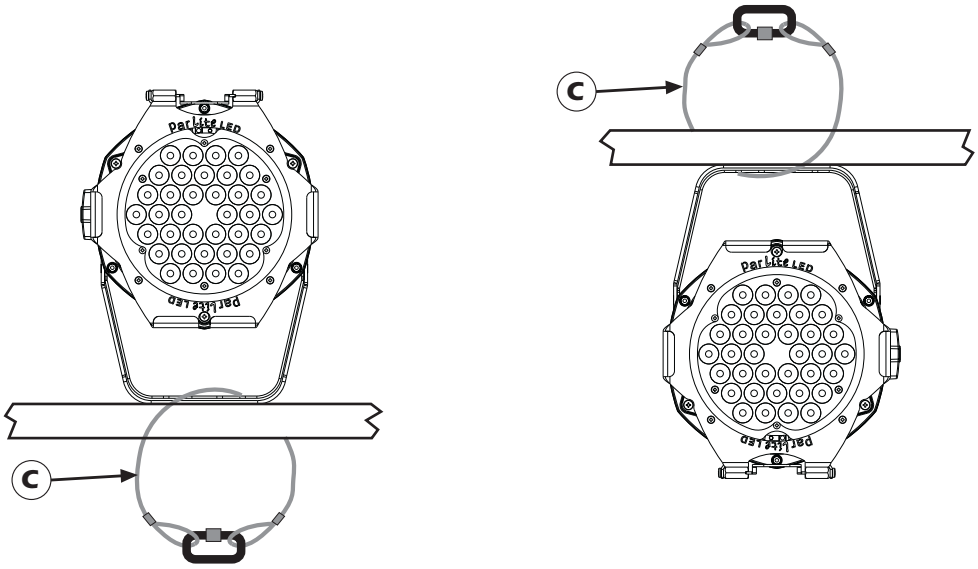

4.3. Adjusting beam direction

The **Par Lite LED** can be tilted to adjust the beam output. To perform this adjustment, follow the instructions set out below.

1. Loosen the handle "**D**" located on the side of the projector, thus allowing the inclination to be changed.

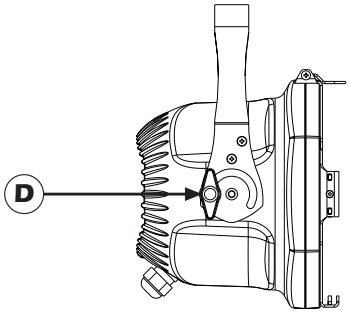

2. Adjust the projector's tilt.

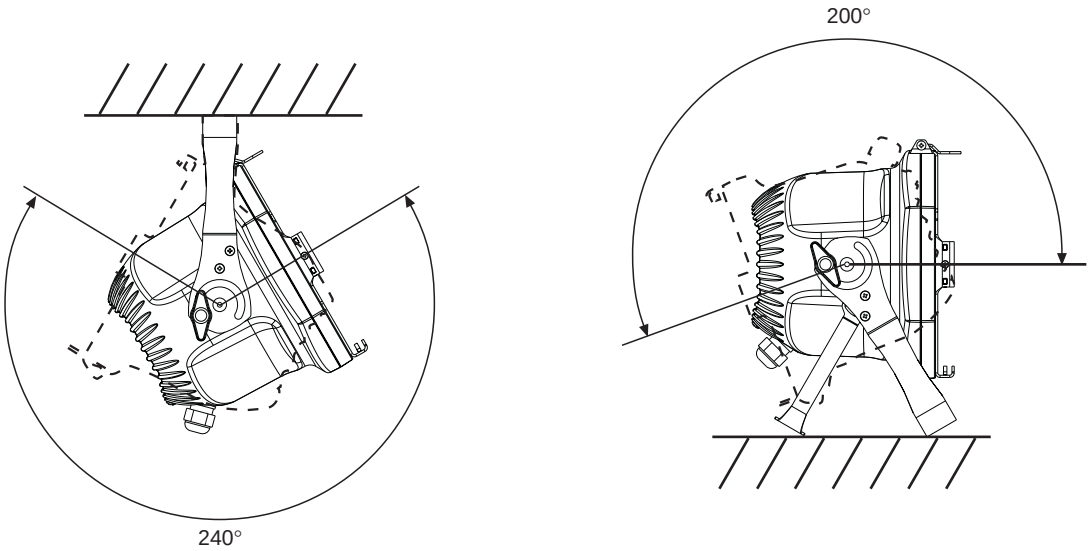

3. Refasten the handle "**D**" on the side of the projector.

4.4. Opening and closing up the projector

The various procedures which follow can only be performed with the projector housing removed.
To gain access to the internal of the projector use a suitable screwdriver to remove the 3 screws "**E**" which affix the front frame and remove it.

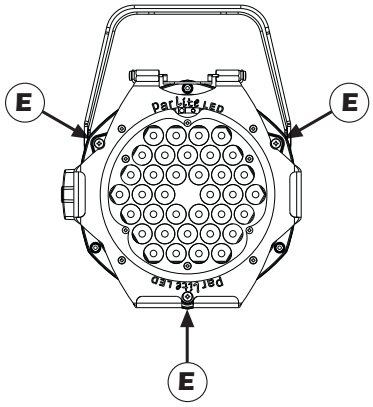

You should now have complete access to the internal of the projector and can proceed to carry out the procedures described below.

ATTENTION!!

Remove mains power prior to opening up the projector..

To close up the projector, replace the housing and reaffix the 3 screws previously removed.

4.5. Adjusting the beam angle

Several optional optical groups are available for **Par Lite Led**. They are used to vary the beam dimension and make it suitable for different lighting applications and specifically: a group of lenses for a larger projection angle, a flood reflector and several filters that can be fitted either internally or externally to the unit
The standard optical group, fitted on **Par Lite Led**, is composed by a group of lenses that gives 12° beam angle.
Here following you will find instructions to install different optical groups.

1. Open the unit as shown on paragraph **4.4 Open and close the unit**
2. Remove the 3 screws "**G**".
3. Replace the lenses "**L**" and ensure that the led of "**H**" disc fit perfectly in the lenses seats

If you wish to use an optional filter holder (code **CO9169**) follow the instructions as per point **4** and **5**.
4. After having positioned the lenses group insert the "**M**" filter
5. Lock it with the "**P**" filter holder

6. Tighten the 3 "**G**" fixing screws
7. Close the unit

For the users of the optional IR remote control: ensure that the "N" slot is aligned as per drawing on lenses group and filter holder with IR sensor is positioned on the side of led disc.

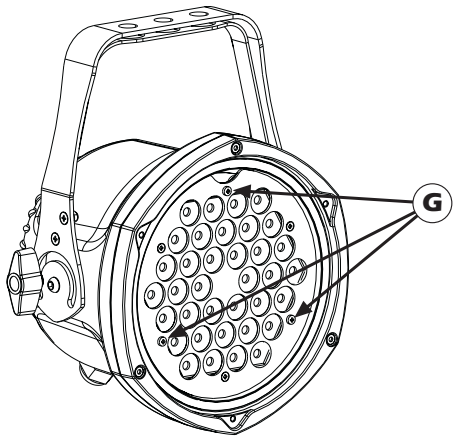

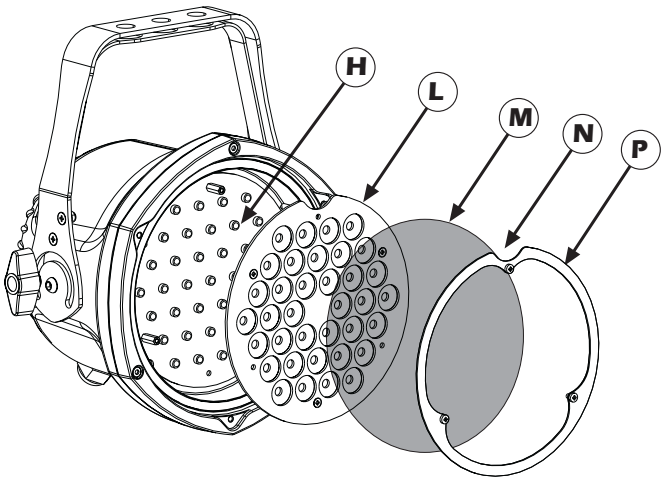

To further increase the beam angle the **"R"** flood reflector is available (code **CO9168**) and it must be fitted instead of the lenses group and filter holder. **For the user of IR remote control: ensure that the "N" slot is aligned on the reflector where the IR sensor is located on the side of led disc "H".**

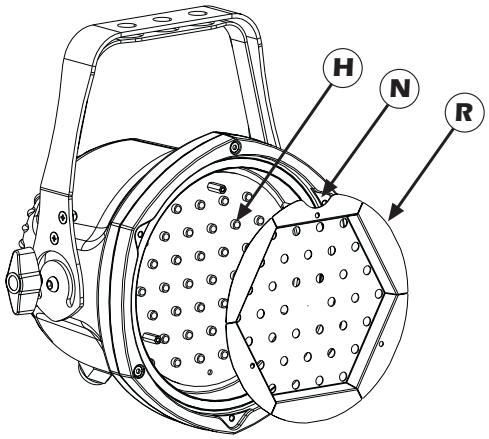

To vary the wideness of the beam without opening the unit, it's possible to install an external filter holder **"S"** (code **CO9169/1**), as shown on following drawing.

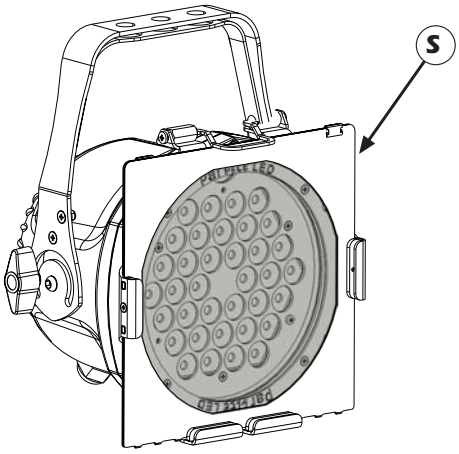

The following table details the range of beam angle and diffusion filters available for the **Par Lite Led**.

Optical group	**Beam angle**
Narrow Lenses (standard)	**12°**
Narrow Lenses + Light Frost Filter	**17°**
Narrow Lenses + Frost Filter	**25°**
Narrow Lenses + Strip Frost Filter	**Beam Shake**
Medium Lenses (cod. 9167)	**30°**
Medium Lenses + Light Frost Filter	**35°**
Medium Lenses + Frost Filter	**45°**
Medium Lenses + Strip Frost Filter	**Beam Shake**
Flood	**130°**

To shape the beam you can use an external barndoor (code **CO9164**).

5. Powering up

5.1. Operating voltage and frequency

The fixture may operate at voltages ranging from 90 to 250V AC at a frequency of 50 or 60 Hz.
It is not necessary to effect any setup procedures, Par Lite LED will automatically adjust its operation to suit any frequency or voltage within this range.

5.2. Mains connection

Cabling
The mains cable provided is a neoprene type HQ7RN-F suitable for outdoor applications and complying to the most recent international standards: CEI 20-19, UNEL 35364, CENELEC HD 22.
N.B. In case of cable replacement, similar cable with comparable qualities must be used exclusively (cable 3x1.5 ø external 10 mm, rated 450/750V, operating temperature -25° +60°.

Connection to mains power
for connection purposes, ensure you plug is of a suitable rating:
- 230/240V 0.2 amps constant current.
- 208V 0.25 amps constant current.
- 100/115V 0.5 amps constant current.

Locate the mains cable which exits the base of the unit and connect as shown below:

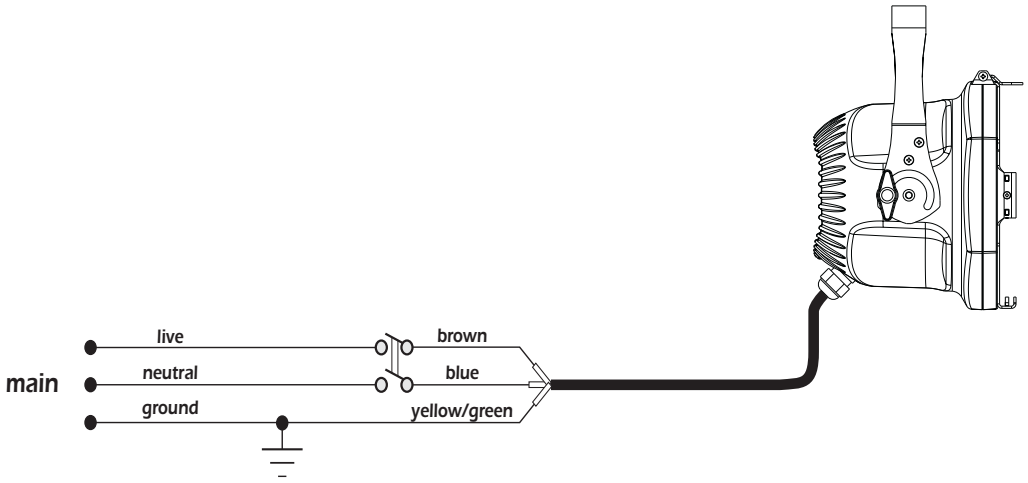

ATTENTION!!

- **The use of a thermal/magnetic circuit breaker for each fixture is recommended. Strict adherence to regulatory norms is strongly recommended.**
- **Par Lite Led should not be powered through a Dimmer as this may damage the internal switching powersupply.**
- **Prior to connecting the device to mains power, ensure that the mains characteristics are within the recommended range for use with the Par Lite Led.**
- **A good earth connection is essential for the correcdt operation of the Par Lite Led. Never install the unit unless the yellow/gree earth cable is securely connected.**
- **All cabling and connections should be carried out by suitably qualified personnel.**

6. DMX signal functions

Par Lite LED can operate in three modes:
1. using DMX512 control signal
2. automated "STAND ALONE" or "MASTER/SLAVE" modes (see chapter **9. AUTO function**)
3. using an IR remote in either "STAND ALONE" or "MASTER/SLAVE" (see chapter **10. IR function**)

6.1. Connecting DMX signal

Control signal is digital and is transmitted via two pair screened cable, as recommended in international standards for the transmission of DMX512. Connection is serial, utilising the XLR3 sockets located on the rear panel of the **Par Lite LED.**

Signal connection via the XLR3 connectors
Connection is to international standards. Connection is as indicated below:

pin 1 = GND
pin 2 = data -
pin 3 = data +

Should your DMX 512 controller output signal via a cannon XLR5 (5 pin), pins 4 and 5 should remain unconnected.

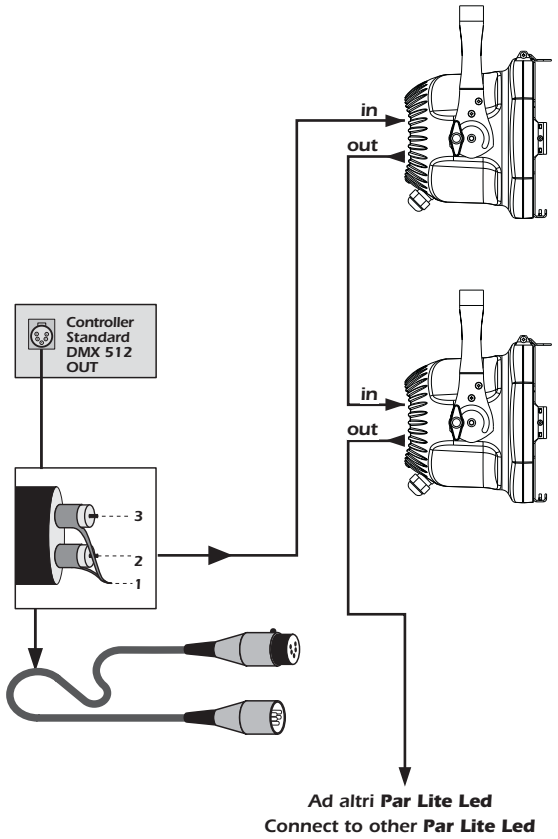

ATTENTION!!

Ensure that all data conductors are isolated from one another, the screening and the metal housing of the connector. Pin number 1 and the housing should never be connected to mains power.

6.2. Powering up

After having followed the preceding steps, turn on mains power on to the unit.
The **POWER** led located near the dip-switch panel will come on.

Turning on power with DMX signal connected.
The yellow DMX led will flash to indicate that **DMX 512** is being correctly received. If the yellow led is off, DMX signal is not being received (see section **16. Frequently asked questions**).

6.3. DMX addressing

Via the dip-switch panel, it is possible to assign a DMX address to the fixture. The address is determined by the sum of the values associated with the dip switches set to the on position.
Each **Par Lite LED** utilises **6 channels** of **DMX 512** signal for complete control.

IMPORTANT NOTE: the following points are valid for all the instructions which follow.
1. Setting a dip-switch to the **ON** position activates its function
2. The **DMX** address may be altered without the need to turn the **Par Lite LED** off.

The following are examples only for setting DMX addresses.

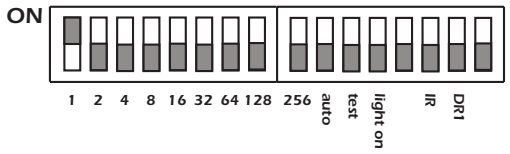

Par Lite LED number 1 Address **DMX 001**
is obtained by setting dip-switch **1 to the ON position**

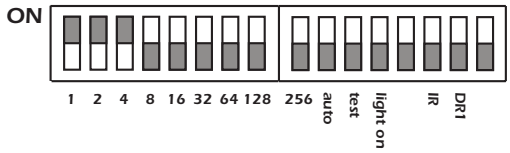

Par Lite LED number 2 Address **DMX 007**
is obtained by setting dip-switches **1, 2 & 4 to the ON position**

6.4. DMX functions

channel	function	type of control	effect	decimal	percentage
1	master dimmer	proportional	adjust luminous output intensity from 0 to 100%	0 - 255	0% - 100%
2	red	proportional	proportional control of the percentage of red colour from 0 to 100%	0 - 255	0% - 100%
2	speed	proportional	fade speed between colours from fast to slow (from 1 second to 1 minute)	0 - 255	0% - 100%
Note 1: channel 2 has various functions depending upon the selection made on channel 6					
3	green	proportional	proportional control of the percentage of green colour from 0 to 100%	0 - 255	0% - 100%
3	pause	proportional	control of the pause time between colours (steps); the pause time is adjustable proportionally from 1 second to 3.30 minutes	0 - 255	0% - 100%
Note 2: channel 3 has various functions depending upon the selection made on channel 6					
4	blue	proportional	proportional control of the percentage of blue colour from 0 to 100%	0 - 255	0% - 100%
5	strobe effect	step	no effect	0 - 9	0% - 4%
		proportional	variable speed strobing effect, from slow to fast	10 - 57	4% - 22%
		step	stop strobe	58 - 59	23% - 23%
		proportional	sequenced pulse effect, slow closing, fast opening (variable speed pulsing, from slow to fast)	60 - 108	24% - 42%
		step	stop strobe	109 - 110	43% - 43%
		proportional	sequenced pulse effect, fast closing, slow opening (variable speed pulsing, from slow to fast)	111 - 159	44% - 62%
		step	stop strobe	160 - 161	63% - 63%
		proportional	random strobe effect with variable speed from slow to fast and synchronised colours	162 - 207	64% - 81%
		step	stop strobe	208 - 209	82% - 82%
		proportional	random strobe effect with variable speed from slow to fast and non-synchronised colours	210 - 255	82% - 100%
6	automated functions	step	no effect	0 - 9	0% - 4%
			automated program 1	10 - 50	4% - 20%
			automated program 2	51 - 91	20% - 36%
			automated program 3	92 - 132	36% - 52%
			automated program 4	133 - 173	52% - 68%
			random program repeat	174 - 214	68% - 84%
			repeat all programs in sequence	215 - 255	84% - 100%
Note 3: pause and speed settings are added					

7. Test function

With the dip-switch set to the ON position, **Par Lite LED** will test each individual channel without the need for a DMX controller to be connected.
For example:

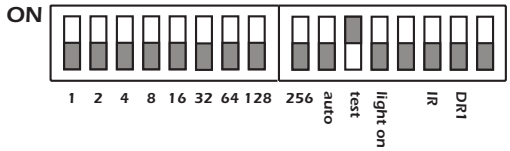

set the dip-switch to **ON** on the **Par Lite LED.**
The fixture will perform a quick sequential channel test

8. Light ON Function

Via this function the leds of the **Par Lite LED** may be set to always on at a predetermined intensity.
When set to **ON** the dip-switch, illumination level and colour can be set by a combination of settings as shown in the table below.

dip-switch 1	dip-switch 2	dip-switch 4	**Red**
on	off	off	illumination level 20%
off	**on**	off	illumination level 30%
on	**on**	off	illumination level 40%
off	off	**on**	illumination level 50%
on	off	**on**	illumination level 60%
off	**on**	**on**	illumination level 80%
on	**on**	**on**	illumination level 100%
dip-switch 8	dip-switch 16	dip-switch 32	**Green**
on	off	off	illumination level 20%
off	**on**	off	illumination level 30%
on	**on**	off	illumination level 40%
off	off	**on**	illumination level 50%
on	off	**on**	illumination level 60%
off	**on**	**on**	illumination level 80%
on	**on**	**on**	illumination level 100%
dip-switch 64	dip-switch 128	dip-switch 256	**Blue**
on	off	off	illumination level 20%
off	**on**	off	illumination level 30%
on	**on**	off	illumination level 40%
off	off	**on**	illumination level 50%
on	off	**on**	illumination level 60%
off	**on**	**on**	illumination level 80%
on	**on**	**on**	illumination level 100%

Other examples of possible setting combinations are shown below.

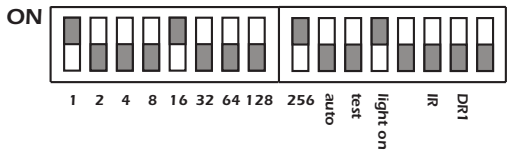

LIGHT ON dip-switch set to **ON**
RED at **20%** (dip-switch **1** set to **ON**)
GREEN at **30%** (dip-switch **16** set to **ON**)
BLUE at **50%** (dip-switch **256** set to **ON**)

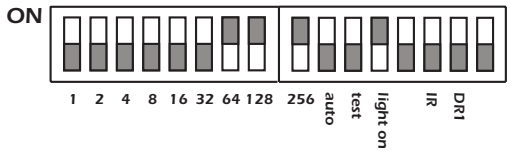

LIGHT ON dip-switch set to **ON**
RED off
GREEN off
BLUE at **100%** (dip-switches **64, 128, 256** set to **ON**)

ATTENTION!!

Setting the Light ON dip-switch to active inhibits control via DMX signal.
The three colour dip-switches set to the OFF position turn off the colour.

9. Auto function

This function can be used to determine the operating mode of the projector (either **STAND ALONE** or **MASTER/SLAVE**), make program selections or alter the crossfade times. Setting this function to on inhibits control via DMX signal.

9.1. MASTER/SLAVE mode

In MASTER/SLAVE mode, it is possible to control, via a projector set as MASTER, a series of **Par Lite LED** units set to act as SLAVE fixtures. The table below displays the settings required for fixtures to be connected in this manner.

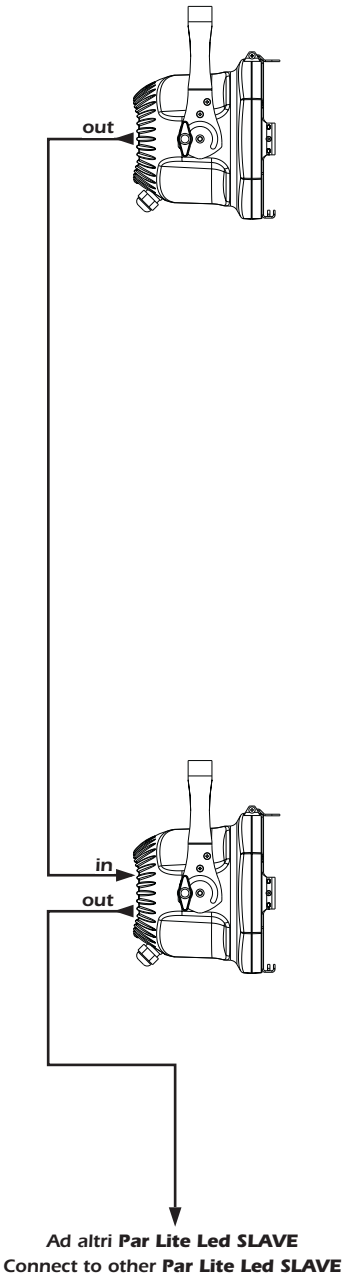

MASTER	
ON 1 2 4 8 16 32 64 128 256 auto test light on IR DR1	**Par Lite LED** set as **MASTER running program 1**

To configure a **Par Lite LED as MASTER** is simply a matter of setting the **Auto** dip-switch to the **ON** position and selecting a program for it to follow by making a selection from the following dip-switches: **1-2-4-8-256**. There are 4 programs which can be selected.
- dip switches **1-2-4-8** select programs 1, 2, 3, and 4 respectively.
- dip-switch **256** runs all four programs sequentially

ATTENTION!!

It is only possible to select one program at a time.

SLAVE	
ON 1 2 4 8 16 32 64 128 256 auto test light on IR DR1	**Par Lite LED** set to **SLAVE**

To configure a **Par Lite LED** as **SLAVE** is simply a matter of setting the **Auto** dip-switch to the **ON**. **All** other dip-switches should be set to **OFF**.

After having selected the program you wish to run, dip-switches **16** and **32** may be used to set the wait time for each scene in the selected program. In this manner, programs can be made to run faster or slower according to your requirements. The following table outlines the dip-switch settings and their associated wait times.

time (wait time)		
dip-switch 16	dip-switch 32	
off	off	hold time 3 second
on	off	hold time 10 second
off	**on**	hold time 30 second
on	**on**	hold time 1 minute

Via dip-switches **64** and **128** it is possible to set the fade times for each scene in the selected program. The following table outlines the dip-switch settings and their associated fade times.

speed (fade time)		
dip-switch 64	dip-switch 128	
off	off	crossfade time 3 second
on	off	crossfade time 10 second
off	**on**	crossfade time 30 second
on	**on**	crossfade time 1 minute

The timing for each scene in a program is therefore a sum of the crossfade and hold times as set via these dip-switches
The following table gives an example of a possible setting.

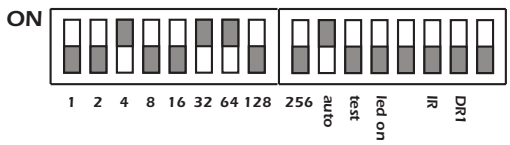

Par Lite LED set as a **MASTER running program 3**
hold time 30 sec. crossfade time 10 sec.
Set the **AUTO** and **4 dipswitches to ON** will select the fixture as MASTER running program 3.
Setting dip-switch **16** to **OFF** and **32** to **ON** will set a hold time of **30 sec.**
Dip-switch **64** to **ON** and **128** to **OFF** will set a crossfade time of **10 sec.**

ATTENTION!!

When the AUTO function is selected DMX signal reception is disabled to avoid system conflicts.

9.2. STAND ALONE mode

In **STAND ALONE** mode the projector operates independently with no need for DMX signal. It is possible to select the program which the projector runs and to alter the hold and crossfade times.

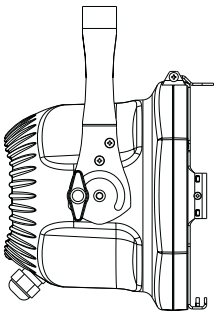

STAND ALONE

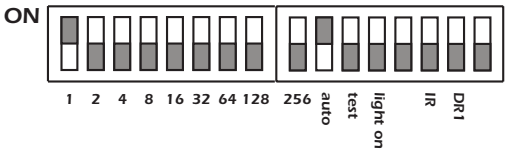

Par Lite LED set as **STAND ALONE running program 1**

To configure the **Par Lite LED** as **STAND ALONE** simply set dip-switch **Auto** to the **ON** position and select the program you wish to run and the hold and crossfade times to follow, as described in the previous section.

10. IR function

This function allows for control via an optional infrared controller and receiver (infrared receiver cod. **CO9163**, controller cod.**FO9281**).

Via this function, it is possible to select the operating mode (**STAND ALONE** or **MASTER/SLAVE**). The use of this function disables the use of DMX signal.

10.1. IR MASTER/SLAVE mode

In MASTER/SLAVE mode it is possible to control a fixture set as MASTER, and other **Par Lite LED** configured as SLAVES. The following diagram outlines the necessary settings for this configuration.

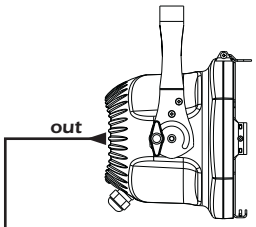

MASTER IR

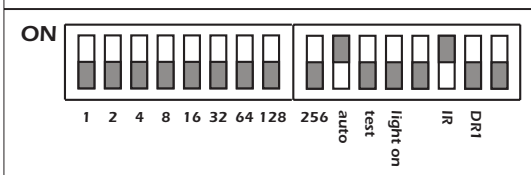

Par Lite LED set as **MASTER IR**

To configure a **Par Lite LED** as **MASTER** set the IR ***and Auto*** dip-switches to **ON.**

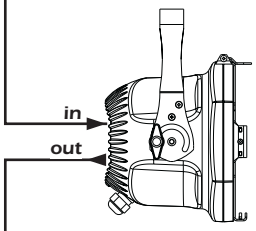

SLAVE IR

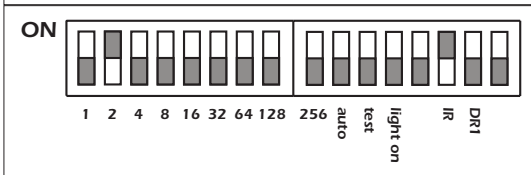

Par Lite LED set as **SLAVE group 2**

To configure a **Par Lite LED** as a **SLAVE** set the **IR** dip-switch to **ON** and set to **ON** the dip-switch corresponding the the desired group. It is possible to subdivide the units set as SLAVE into four groups which can be controlled independently. The following diagram outlines the necessary settings for this configuration.
Group **1** - Dip-switch **1**
Group **2** - Dip-switch **2**
Group **3** - Dip-switch **4**
Group **4** - Dip-switch **8**

ATTENTION!!
The SLAVE unis of group 1 behave as the MASTER units.

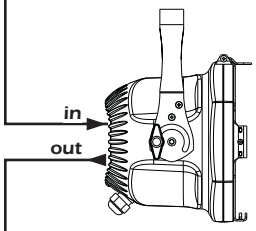

SLAVE IR

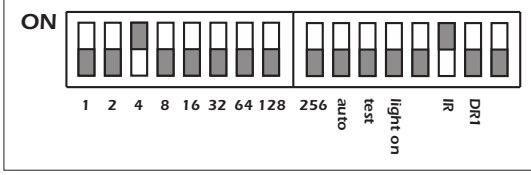

Par Lite LED set as **SLAVE group 3**

To configure a **Par Lite LED** as **SLAVE group 3** set the **IR** dip-switch to **ON.** Select the group by setting the **ON** dip-switch to **4**.

Ad altri ***Par Lite Led SLAVE***
Connect to other ***Par Lite Led SLAVE***

ATTENTION!!

To control a Panorama Led RGB SLAVE unit, the controller should be pointed at its corresponding group's MASTER fixture.

10.2. IR STAND ALONE mode

In **STAND ALONE** mode the projector operates independently of any DMX control signal. All inputs are via the remote control.

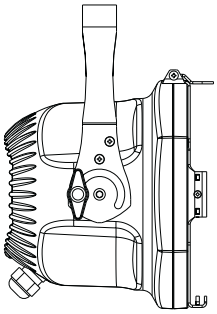

STAND ALONE IR	
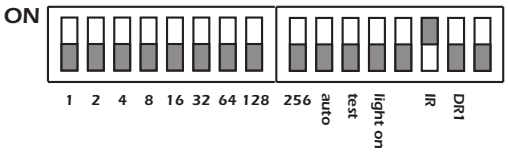	**Par Lite LED** set to **STAND ALONE IR**

To set the **Par Lite LED** to **STAND ALONE** mode, set the **IR** dip-switch **to ON.**

11. DR1 function

This function allows for the transmission of bidirectional data with the **DR1** (cod. **CO9703**). Via the **DR1** (display remote) it is possible to remotely access, view and alter all the fixture's parameters and settings.

The **DR1** remote display unit allows the user to:

Monitor:

1) the current Software Version loaded
2) temperature
3) led operating life
4) projector operating life
5) presence and characteristics of incoming DMX 512
6) error messages
7) ID code
8) alarms

Edit and set:

1) DMX address
2) force leds on
3) function mode

To initiate communications with the **Par Lite LED** the **DR1** must be installed into the DMX signal chain between the fixture and the controller following the instructions located internally on the unit.

The **DR1** dip-switch must be set to the **ON position**; from this point on, dip-switches 1 to 128 take on the task of assigning an identifying value (ID) to the fixture. They no longer set the fixture's DMX address, which is done by the **DR1**. The maximum number of unique IDs available in the **DR1** system is 250; dip-switch 256 has no functionality.
An example of a possible configuration is shown below:

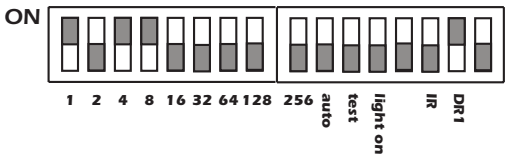	**Par Lite LED** set to ID 13 and **DR1 active** configured by setting dip-switch **DR1** to **ON** and dip-switches **1, 4** and **8** to **ON**

11.1. Function modes using DR1 (MODE)

Using the inbuilt functionality of the **Par Lite LED** via the **DR1**, it is possible to alter the function mode of the fixture. The following diagram illustrates the menu navigation system of the **DR1** in **MODE**.

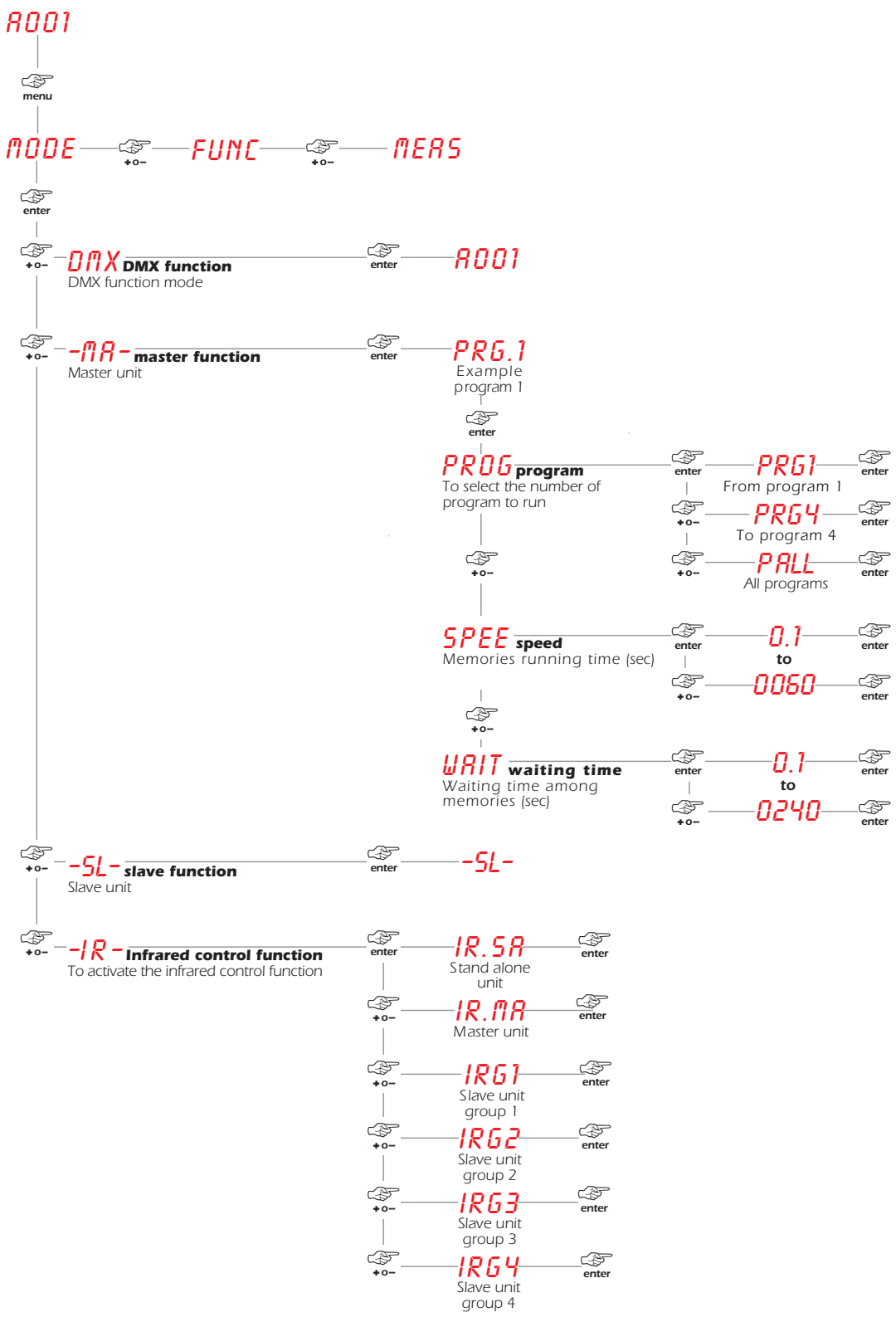

11.2. Setting up functionality via DR1 (FUNC)

Using the inbuilt functionality of the **Par Lite LED** via the **DR1**, it is possible to alter the function settings of the fixture. The following diagram illustrates the menu navigation system of the **DR1** in **FUNC**.

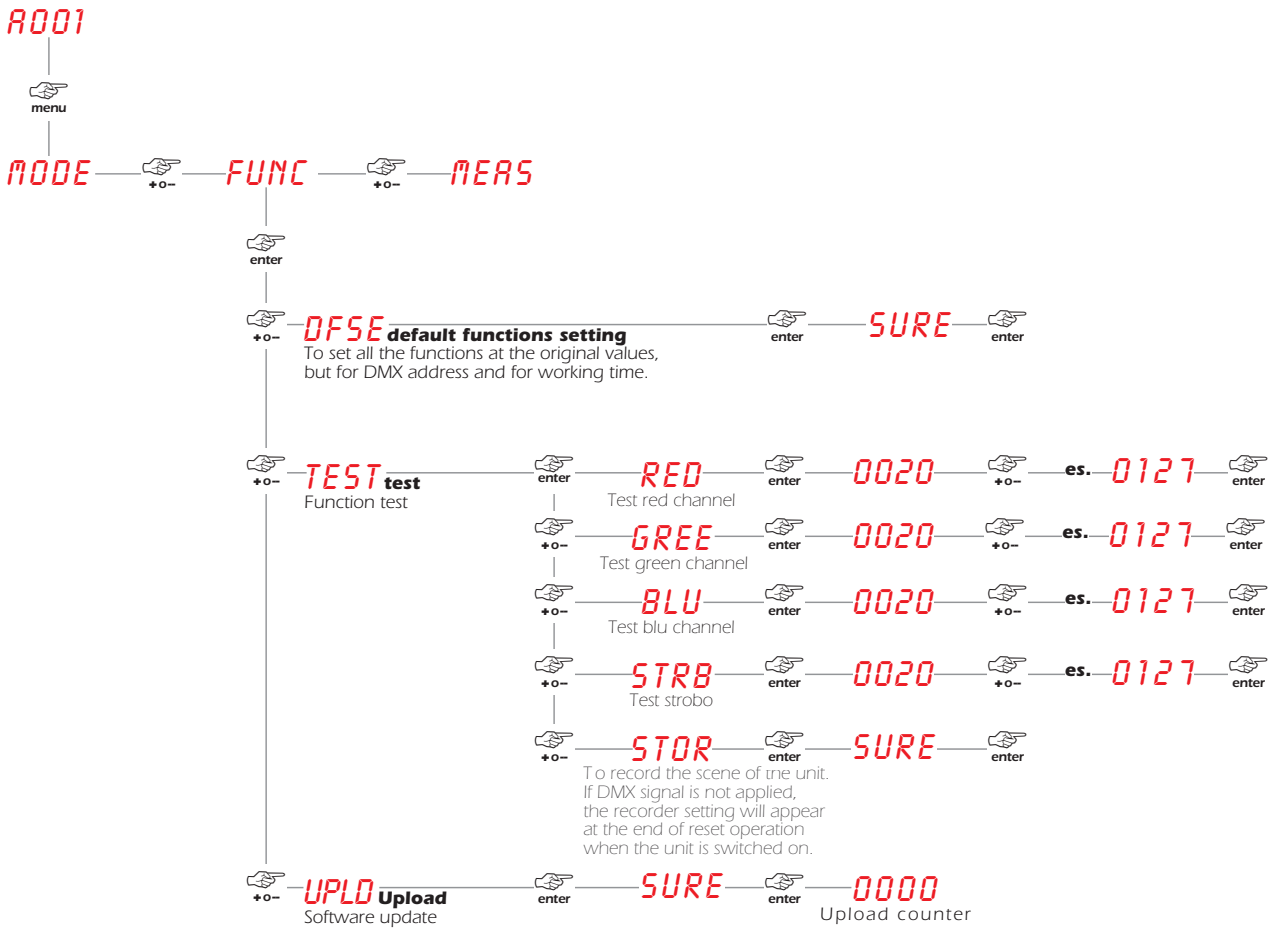

UPLOAD function

Using this function it is possible to upload software to the **Par Lite LED** using a **DR1** and a PC.
For further information, consult the DR1 manual.

11.3. Diagnostic functions using DR1 (MEAS)

Using **MEAS** mode, it is possible to carry out several digital parameters checks and autodiagnostics. The following diagram illustrates the menu navigation system of the **DR1** in **MEAS**.

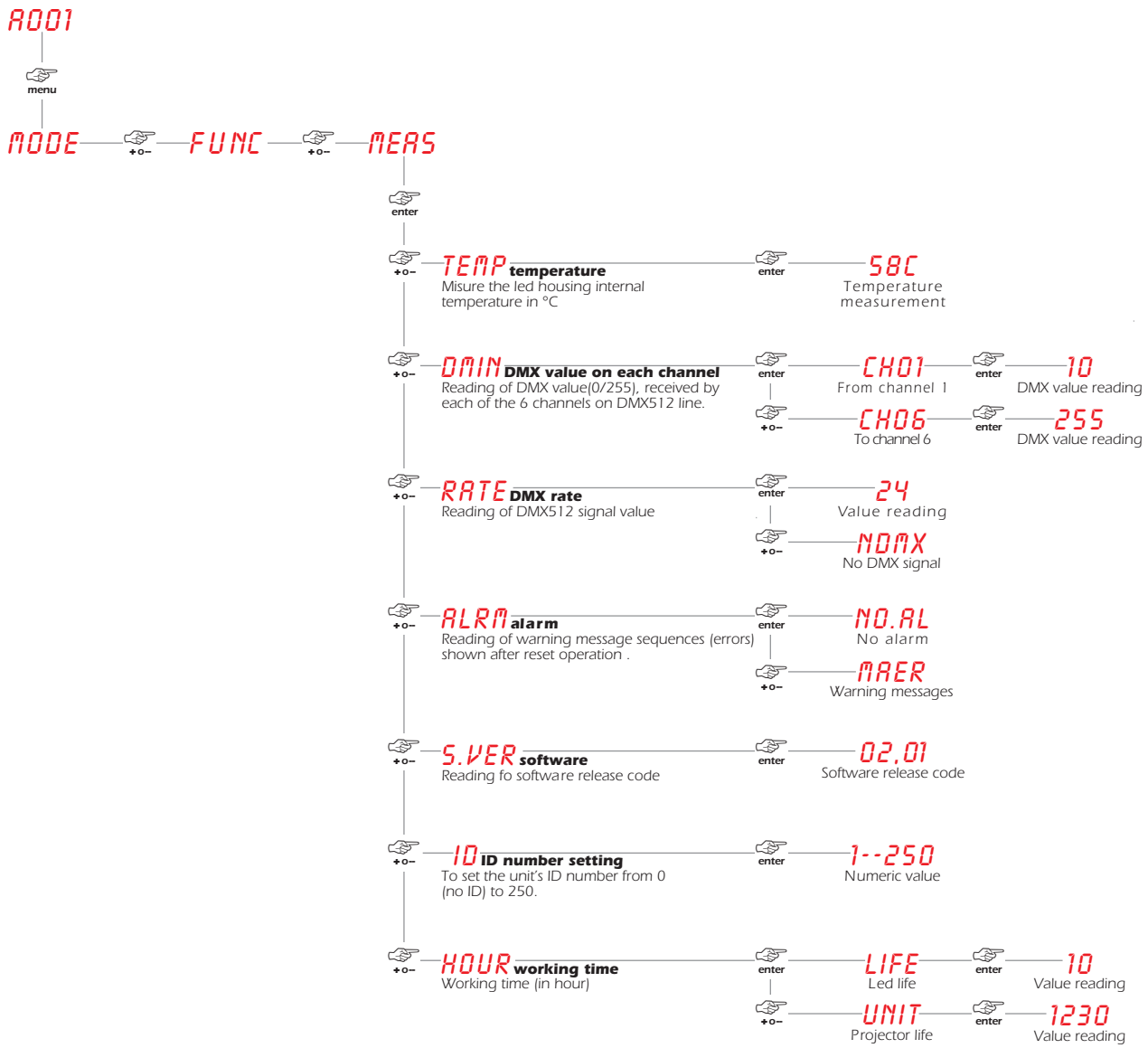

11.4. Error messages using DR1

MESSAGE CODE	DESCRIPTION
DTER	DATA Error The initial configuration settings are fautly or have been loaded incorrectly. The projector has loaded its default configuration. Turn the projector off and on again and if the error persists the EEPROM is either defective or absent; refer to your **Coemar** service centre for a replacement component.
ADER	DMX ADDRESS Error The projector is not receiving all the DMX channels necessary for its operation. Check the DMX address and the control console operation. Note that some controllers may not generate all 512 channels of signal.
MAER	MASTER MODE Error This message indicates that the user has attempted to set the unit to MASTER mode whilst DMX signal is still being received. Detach any DMX control signal or remove MASTER mode settings.

12. Switch panel signal

The two leds on the dip-switch panel indicate the functionality of the **Par Lite LED**.

Led	Function	Led on	Led off	Led flashing
Green	Power	Present	Absent	Undefined
Yellow	DMX state	DMX poorly connected	No DMX signal	DMX OK

13. Thermal protection

A thermal sensor in the body of the **Par Lite LED** protects the fixture against overheating. The sensor operates by removing power to the leds should the operating temperature exceed the factory preset.

14. Maintenance

Whilst every possible precaution has been taken to ensure the trouble-free operation of your **Par Lite LED**, the following periodic maintenance is highly recommended. We recommend that the voltage to the unit be removed prior to any maintenance procedure taking place.

ATTENTION!!

Always remove mains power prior to opening up the fixture!

14.1. Fuse replacement

Use a multimeter to check the fuse, replacing any faulty or damaged fuses with ones of equal value, dimensions and characteristics. The following diagram indicates the positioning and characteristics of the protection fuses in the fixture.

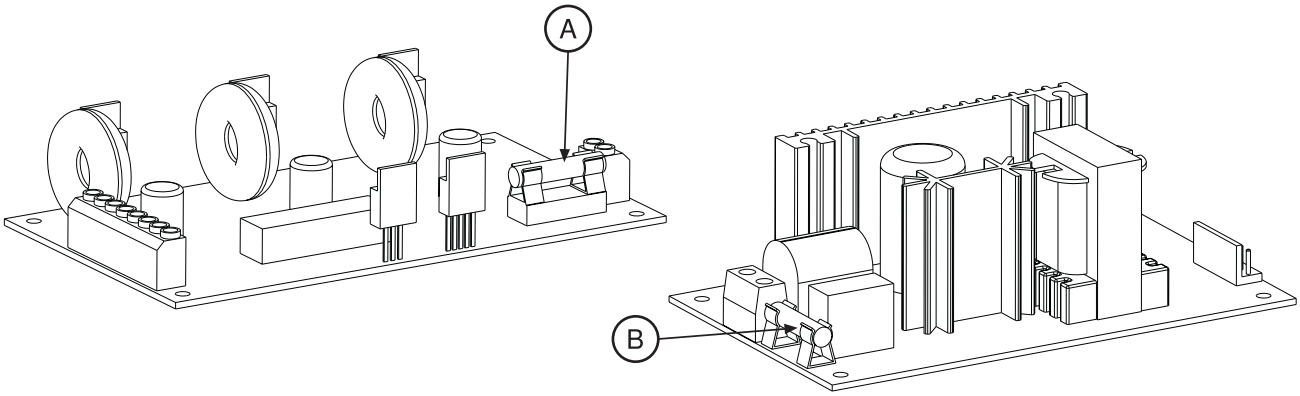

Fuse A: 2A F 250V
Fuse B: 4A T 250V

14.2. Periodic maintenance

Mechanicals
Check that the units is not mechanically damaged. Regularly clean the glass by using a soft cloth with a specific cleaning liquid and, if necessary, replace the damaged parts.

Electrical components
Check all electrical components for correct earthing, oxidation and proper attachment of all connectors, cleaning and refastening if necessary.

15. Spare parts

All the components of the **Par Lite LED** are available as spare parts from your **Coemar service centre**.
Accurate description of the fixture, model number, and type will assist us in providing for your requirements in an efficient and effective manner.

16. Frequently asked questions

The diagram below indicates some possible problems and solutions if they should occur.

Problem	Possible solution
Par Lite LED won't turn on.	Mains power is not available to the **Par Lite LED**: - Check that the green Led is on, if so check the incoming voltage to the **Par Lite LED.** **- Check the main pcb fuse** and that of the switching powersupply.
Par Lite LED doesn't respond to DMX signal	Incoming DMX may not be being received by the **Par Lite LED**: - check that the led indicating DMX input is flashing. If not, check the DMX console's output and any cabling for continuity**.** - Check the dip-switch panel to ensure that no functions are selected which inhibit **DMX control.** **- Par Lite LED** may be incorrectly addressed. Check the DMX addressing.
The **Par Lite LED** is set to auto but is not running any programs	In addtion to setting the AUTO dip-switch to on, it is necessary to also select **a program number** (see section **9. AUTO function**). - Multiple programs have been selected - only one program at a time may be selected. - Check that amongst the interconnected fixtures, only one has bee set to Master. - Ensure that there is no incoming **DMX** signal (this may cause a conflict in signals).

Coemar s.p.a.

via Inghilterra 2/A - 46042 Castel Goffredo (Mantova) Italy
ph. +39 0376/77521 - fax +39 0376/780657
info@coemar.com

Coemar si riserva il diritto di apportare modifiche senza preavviso.
Coemar reserves the right to effect modifications without notification